High Accuracy Turbine Flow Meter with Male Thread

FTB200-EO Metric Male Threads with Ermeto 24° Cone Fittings

FTB200-OL Metric Male Threads with O-ring Face Seal Ends (ISO8434-3)

FTB200-NM NPT Male Threads

- High pressure resistance
- Low pressure loss
- Fast response time
- High repeatability and accuracy
- Resistant to contamination
- Pulse / analog output selectable

Fluid flowing through FTB200 causes the rotor to revolve. As the rotor blade pass the pickoffs, electrical pulses are produced in which frequency is proportional to the flow rate. The revolutions per minute and the K-factor (number of pulses/Gallon) make it possible to obtain the flow volume passing through the unit.

FTB200 series are used to measure medium or lower viscosity media, such as water, light fuel, solvent, hydraulic oil, lubricating oil etc.

Specifications

Nominal Diameter	FTB200-EO metric male threads with Ermeto 24° cone fittings DN4...DN32
	FTB200-OL metric male threads with O-ring face seal ends (ISO8434-3) DN4...DN40
	FTB200-NM NPT male thread DN10...DN40
Applicable Medium	Medium or lower viscosity liquids
Accuracy	Better than ±1% of reading，±0.5% /±0.2% selectable
Repeatability	±0.1% of reading
Pressure Rating	MAX. 420bar
Ambient Temperature	-40...85℃
Medium Temperature	-40...120℃，-200...400℃ (high temprature type)
Materials	
Body / Rotor Support	304 stainless steel (316 stainless steel optional)
Turbine	Stainless steel
Shaft	Tungsten carbide/ceramic
Bearing	Stainless steel ball bearing,
	Tungsten carbide/ceramic journal bearing
Process Connection	...EO, ...OL, ...NM

Applications

- Petrochemical/energy industry
- Hydraulic/lubrication system
- Water treatment
- Oil / gas industry
- Test systems

Parameter Table

Types	Measuring Range (L/Min)		DN (mm)	Max. Pressure Rating（bar）			Filtration (micron)	
	Magnetic pickoff	Carrier frequency pickoff		...EO metric male threads with Ermeto 24°	...OL metric male threads with O-ring	...NM NPT male thread	Journal bearing	Ball bearing
FTB200...4.5L	0.6-4.5	0.3—4.5	4	400 (M14×	400 (M18×1.5)	400 (1/4")	75	-
FTB200...10L	1.6-10	0.8—10	6	400 (M16×1.5)	400 (M22×1.5)	300 (3/8")	75	-
FTB200...20L	3-20	1.5—20	10	400 (M24×1.5)	400 (M27×1.5)	250 (1/2")	100	30
FTB200...100L	10-100	5—100	15	400 (M36×2)	300 (M36×2)	250 (3/4")	150	50
FTB200...130L	13-130	6—130	20	250 (M42×2)	250 (M42×2)	250 (1")	150	50
FTB200...170L	17-170	8—170	25	250 (M52×2)	250 (M45×2)	250 (1-1/4")	150	70
FTB200...250L	25-250	12—250	32	160 (M52×2)	160 (M60×2)	160 (1-1/2")	200	100
FTB200...320L	32-320	16—320	40	-	160 (M64×2)	160 (2")	200	100

Pickoffs & Amplifiers

FTB200 can be integrated with several different pickoffs, preamplifiers and signal conditioners, such as magnetic pickoffs, carrier frequency pickoffs, linear correction preamplifiers, smart control units, to meet specific measurement needs.

Pickoffs

Magnetic pickoffs can sense a ferrous rotor and is ideal for use in all types of Nexon turbine flow meters. Options include cryogenic, high temperature and explosion proof.

Carrier frequency pickoffs offer low speed response, no drag, large sensing distance and can sense non-ferrous metals like aluminum or nonmagnetic stainless steel in addition to ferrous metal. Unlike magnetic pickoff, an carrier frequency pickoff is not a passive device and requires coupling with a signal conditioners/preamplifier. These devices produce a square wave output versus the analog sine wave of the magnetic pickoff.

Amplifiers

Nexon has developed a line of preamplifiers and signal conditioners for installation with our pickoffs . Our offerings include preamplifiers in several different configurations.

Pulse output amplifier – Output with square signal, proportional to the flow rate.
Amplifier with linearized pulse output – Extending the measuring range and with multi-point linearization, with square wave output, frequency proportional to the flow rate.
Amplifier with analog output – Current analog output or voltage analog output, such as 0-10V, 0-5V, 0-20mA, 4- 20mA.
Amplifier with linearized analog output – Extended measuring range and with multi-point linearization, analog output.
Intelligent flow computer – Digital display, analog output / communication RS485/ switch output optional.

Bearings

Bearings are available in three styles, stainless steel ball , tungsten carbide journal sleeve and ceramic journal sleeve. Ceramic bearing eliminate adhesive wear and perform well in low or non-lubricating liquids found in cryogenic fluids and water. Ball bearings have the least amount of drag, thus provide the widest capable flow range. Journal bearings create more drag, therefore reducing the turndown capability of the flow meter.

Tungsten carbide journal bearing – Applicable to low or non-lubricating media, narrow turndown ratio of the flow meter relative with ball bearing.
Stainless steel ball bearing – Applicable to lubricating media, with low friction, lower limit for flow meter and wider turndown ratio.
Ceramic journal bearing – Self-lubricating, applicable to non-lubricating media such as liquid nitrogen, narrow turndown ratio of the flow meter relative with ball bearing.

Electronics

FTB200 series assembled with below pickoffs:

VS - Magnetic pickoffs with pulse output amplifier
RS - Carrier frequency pickoffs with pulse output amplifier

Power Supply	12...30VDC
Current Consumption	8mA
Outputs	NPN OC output; NPN OC output+pull-up resistor
Reverse Polarity Proof	Yes
Short-circuit Proof	Yes
Operating Temperature	-40...120℃
Ambient Temperature	-40...85℃
Electrical Connection	M12x1plug
	DIN43650-A plug (solenoid plug)
Protection Class	M12X1plug: IP67
	DIN43650-A plug: IP65

VH - High temperature magnetic pickoffs with pulse output amplifier
RH - High temperature carrier frequency pickoffs with pulse output amplifier

Ambient Temperature	-40...85℃
Operating Temperature	VH -200...400℃
	RH -40...200℃
Other parameters please refer to the above	

Wiring - Pusle Output

Wiring	PNP output	NPN output
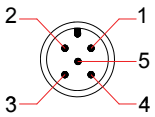 M12x1plug	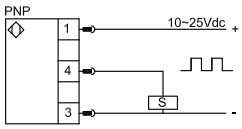	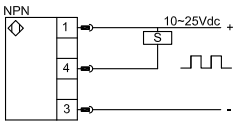
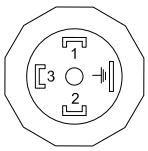 Solenoid plug	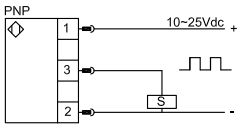	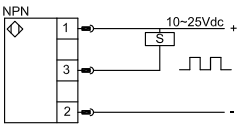

Signal	Plug	Cable
U+	1	Brown
Pulse	4	Black
U-	3	Blue

Signal	Plug
U+	1
Pulse	3
U-	2

FLOW

VA - Magnetic pickoffs with analog output amplifier
RA - Carrier frequency pickoffs with analog output amplifier

Power Supply	12...30VDC
Current Consumption	Voltage analog output: 7mA
	Current analog output: <12mA
Outputs	0...10V
	3-wire (0) 4...20mA
Reverse Polarity Proof	Yes
Short-circuit Proof	Yes
Operating Temperature	-40...120℃
Ambient Temperature	-40...85℃
Electrical Connection	M12x1plug
	DIN43650-A plug (solenoid plug)
Protection Class	M12X1plug: IP67
	DIN43650-A plug: IP65

VAH - High temperature magnetic pickoffs with analog output amplifier
RAH - High temperature carrier frequency pickoffs with analog output amplifier

Ambient Temperature	-40...85℃
Operating Temperature	VAH -200...400℃
	RAH -40...200℃
Other parameters please refer to the above	

Wiring - Analog Output : 3-wiring 4...20mA

Wiring	4...20mA (3-wire)

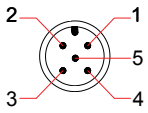

M12x1plug

Signal	Plug	Cable
U+	1	Brown
output	2	White
U-	3	Blue

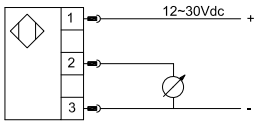

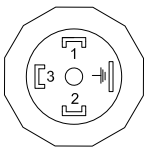

Solenoid plug

Signal	Plug
U+	1
output	3
U-	2

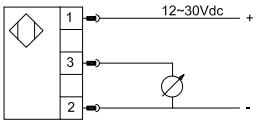

DWEVS – Smart control unit with magnetic pickoffs
DWERS – Smart control unit with carrier frequency pickoffs

Power Supply (Us)	12...30Vdc
Current Consumption	<20mA
Switching Output	
Output	Push-pull (compatible with PNP / NPN)
Current	500mA(power supply 24Vdc)
Current Analog Output	
Output	3/2-wire 4...20mA programable
Load RA（Ω）	RA≤ (Us-10) /0.02
Linearity	≤±0.5% of reading
Voltage Analog Output	
Output	3-wire 0...5V/1...5V programable
Load RA（Ω）	RA≥5KΩ
Linearity	≤±0.5% of reading
Accuracy	≤±0.5% of reading
Temperature	
Operating Temperature	-40...120℃
Ambient/Storage	-40...85℃
Display	8mm height, red 4-digit LED
Material	
Display Head	304 stainless steel (316L customized) + PP
Housing	304 stainless steel (316L customized)
Protection Class	IP67
Electrical Connection	M12×1plug

DWEVH – Smart control unit with high temperature magnetic pickoffs
DWERH – Smart control unit with high temperature carrier frequency pickoffs

Ambient Temperature	-40...85℃
Operating Temperature	-40...200℃
Other parameters please refer to the above	

Wiring

PNP output	NPN output
2xPNP + analog output 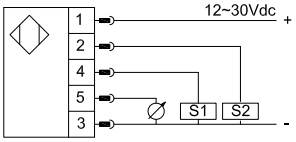	2xNPN + analog output 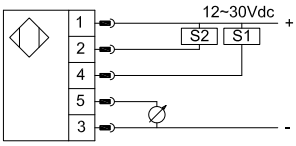

FLOW

Dimensions of FTB200-EO metric male threads with ermeto 24° cone fittings

M12X1plug for pulse output

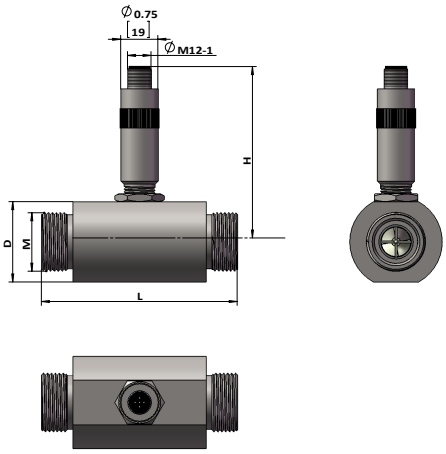

M12X1plug for analog output

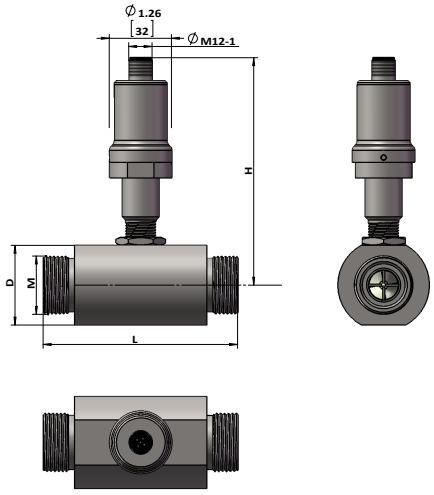

Smart control unit

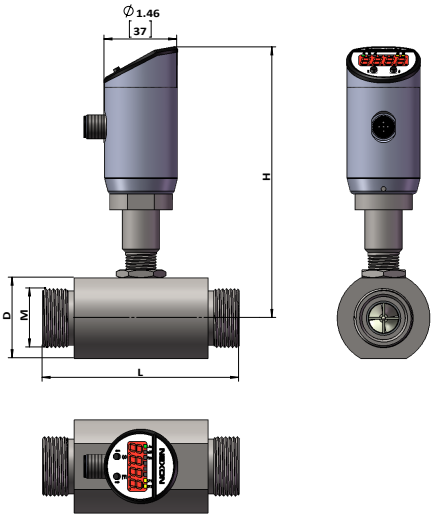

Dimensions of FTB200-OL metric male threads with O-ring face seal ends (ISO8434-3)

M12X1plug for pulse output

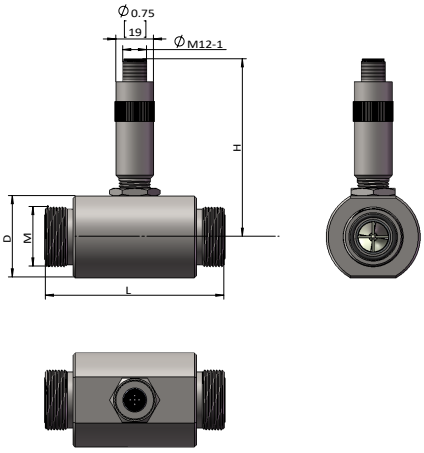

M12X1plug for analog output

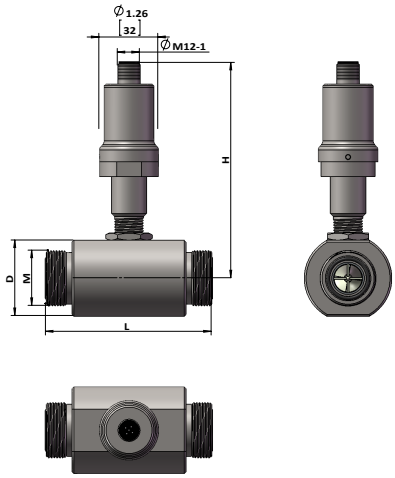

Smart control unit

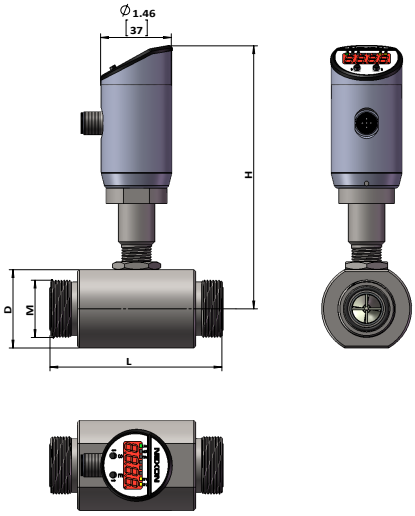

FLOW

FLOW

Dimensions of FTB200-NM NPT male threads

M12X1plug for pulse output

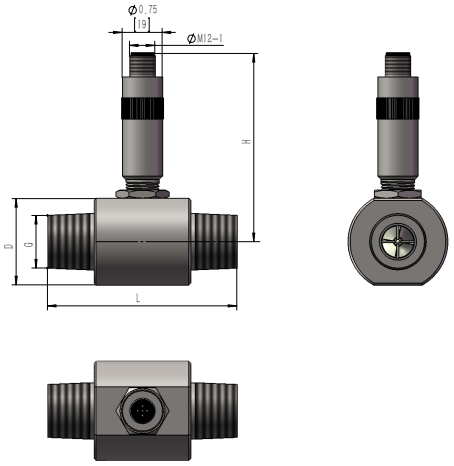

M12X1plug for analog output

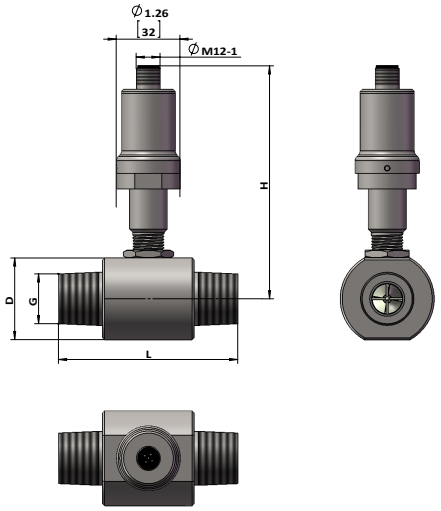

Smart control unit

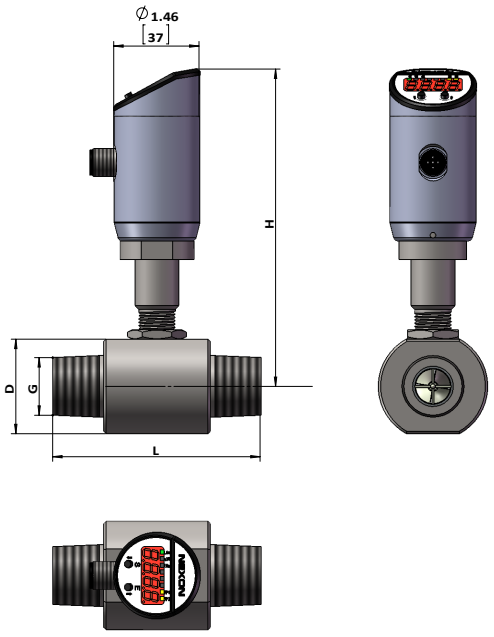

Dimensions

...EO (Nominal Diameter)	L inch (mm)	D inch (mm)	H for pulse output inch (mm)	H for analog output inch (mm)	H for smart control unit inch (mm)
1/4" (DN4)	1.97 (50)	1.3 (33)	3.35(85)	5.16 (131)	5.31 (135)
1/4" (DN6)	1.97 (50)	1.3 (33)	3.39 (86)	5.2 (132)	5.35 (136)
3/8" (DN10)	2.01 (51)	1.42 (36)	3.46 (88)	5.28 (134)	5.43 (138)
1/2" (DN15)	3.98 (101)	1.85 (47)	3.54(90)	5.35 (136)	5.51 (140)
3/4" (DN20)	4.76 (121)	2.05 (52)	3.66 (93)	5.47 (139)	5.63 (143)
1" (DN25)	5.12 (130)	2.2 (56)	3.74 (95)	5.55 (141)	5.71 (145)
1-1/4" (DN32)	6.38 (162)	2.6 (66)	3.9 (99)	5.71(145)	5.87 (149)

...OL / ...NM (Nominal Diameter)	L inch (mm)	D inch (mm)	H for pulse output inch (mm)	H for analog output inch (mm)	H for smart control unit inch (mm)
1/4" (DN4)	1.73 (44)	1.3 (33)	3.35(85)	5.16 (131)	5.31 (135)
1/4" (DN6)	1.73 (44)	1.3 (33)	3.39 (86)	5.2 (132)	5.35 (136)
3/8" (DN10)	1.77 (45)	1.42 (36)	3.46 (88)	5.28 (134)	5.43 (138)
1/2" (DN15)	3.54 (90)	1.85 (47)	3.54(90)	5.35 (136)	5.51 (140)
3/4" (DN20)	4.21 (107)	2.05 (52)	3.66 (93)	5.47 (139)	5.63 (143)
1" (DN25)	4.45 (113)	2.2 (56)	3.74 (95)	5.55 (141)	5.71 (145)
1-1/4" (DN32)	5.6 (142)	2.6 (66)	3.9 (99)	5.71(145)	5.87 (149)
1-1/2" (DN40)	6.5 (165)	3.0 (76)	4.06 (103)	5.87 (149)	6.02 (153)

FLOW

Order Code

FTB200 : Turbine flow meter

Thread type

EO:	Metric male threads with Ermeto 24° cone fittings
OL:	Metric male threads with O-ring face seal ends (ISO8434-3)
NM:	NPT male thread

Nominal diameter (see parameter table for details)

04 :	DN4 thread size
06 :	DN6 thread size
10 :	DN10 thread size
15 :	DN15 thread size
20 :	DN20 thread size
25 :	DN25 thread size
32 :	DN32 thread size
40 :	DN40 thread size

Bearing

BB :	Stainless steel ball bearing (unavailable for DN4 and DN6)
TC :	Tungsten carbide journal bearing
CC :	Ceramic journal bearing

FTB200	EO	15	BB	B	170L	1	VS	-	H

Accuracy

A :	0.2% of reading	**C :**	1% of reading
B :	0.5% of reading	**S :**	Customized

Measuring range (see parameter table for details)

4.5L :	Upper flow limit 4.5L/min	**130L :**	Upper flow limit 130L/min
10L :	Upper flow limit 10L/min	**170L :**	Upper flow limit 170L/min
20L :	Upper flow limit 20L/min	**250L :**	Upper flow limit 250L/min
100L :	Upper flow limit 100L/min	**320L :**	Upper flow limit 320L/min

Turndown ratio (Upper flow limit : lower flow limit)

1 :	10:1	**3 :**	30:1	**5 :**	50:1
2 :	20:1	**4 :**	40:1		

Note: Meter with wide turndown ratio (40:1 or 50:1) should be used with carrier frequency pickoffs and stainless steel ball bearing.

Pickoffs type (see electronics for details)

VS :	magnetic pickoffs with pulse output amplifier
VH :	High temperature magnetic pickoffs with pulse output amplifier
VA :	magnetic pickoffs with analog output amplifier
VAH :	High temperature magnetic pickoffs with analog output amplifier
RS:	Carrier frequency pickoffs with pulse output amplifier
RH:	High temperature carrier frequency pickoffs with pulse output amplifier
RA:	Carrier frequency pickoffs with analog output amplifier
RAH:	High temperature carrier frequency pickoffs with analog output amplifier
DWEVS :	Smart control unit with magnetic pickoffs
DWEVH :	Smart control unit with high temperature magnetic pickoffs
DWERS :	Smart control unit with carrier frequency pickoffs
DWERH :	Smart control unit with high temperature carrier frequency pickoffs

Outputs

- :	Pulse	**A420 :**	4...20mA	**V005 :**	0...5V
A020 :	0...20mA	**V010 :**	0...10V	**V105 :**	1...5V

Electrical connection

H :	DIN43650-A plug (unavailable for DWE series)
S :	M12X1 plug

Electronic Evaluation Units

MST300 – Ratemeter, totalizer

- Case dimensions 72 x 36 x 97 mm
- 6-digit LED display
- Flow meter/totalizer
- Flow rate/total flow dispay
- 1 pulse input
- 1 relay (or OC) output
- Power supply output 24V DC
- RS-485 / Modbus RTU

MST200 – Ratemeter, batcher, totalizer

- Case dimensions 96 x 48 x 100 mm
- 6-digit LED display
- Flow meter/totalizer/batcher
- Flow rate/total flow dispay
- 1 pulse counting input + 3 control inputs
- 0/2 or 4 REL / OC outputs
- Analog output optional
- Power supply output 24V DC
- RS-485 / Modbus RTU

MST100 – Ratemeter, batcher, totalizer

- Protection class IP67
- Case dimensions 110 x 80 x 67mm
- 6-digit LED display
- Flow meter/totalizer/batcher
- Flow rate/total flow dispay
- 1 pulse counting input + 3 control inputs
- 0/2 or 4 REL / OC outputs
- Analog output optional
- Power supply output 24V DC
- RS-485 / Modbus RTU

MCN100 – Controller, Recorder

- Max. 72 inputs with the flow/temperaturee /pressure/level
- Optional outputs with 24 analog outputs /72 SSR outputs
- Data recording and display
- Case dimensions 144X144X100
- Communication interfaces: RS-485/Modbus RTU, USB, Earthnet 10MB，enhanced ACM version
- 5.7" , TFT color graphic display with Touch-panel, 320X240 pixels
- Recording speed: from 0.1s upto 24h, resolution 0.1s
- Memory capacity: 1.5 GB
- Free configuration software